H.C.B-A1786 BMW (N53/ N54/ N55) VACUUM PUMP SEALING COVER REMOVER/ INSTALLER KIT

* For removal and installation of sealing cap of the vacuum pump.

Rating: Not Rated Yet
Price:

Sales price:

Discount:

Ask a question about this product

Manufacturer: HCB Specialty Tools

Description

Product Description:

NEW! BMW (N53/ N54/ N55) VACUUM PUMP SEALING COVER REMOVER/ INSTALLER KIT

Product info?

Model No. :
H.C.B-A1786

Country of Origin :
Taiwan
Brand :
H.C.B
Product Specifications (Features) :

* For removal and installation of sealing cap of the vacuum pump.

* Application: BMW N53, N54, N55 engine.

* BMW OEM No. : 11 7 550 113-000, 11 8 0 030

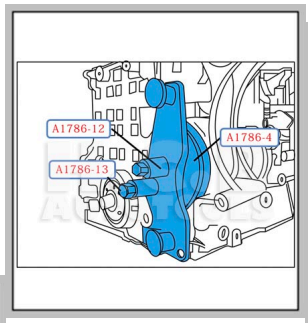
A1786-12
A1786-4
A1786-13

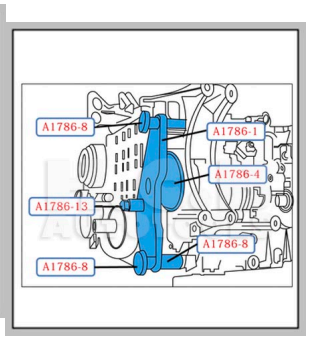
A1786-8
A1786-1
A1786-4
A1786-13
A1786-8
A1786-8

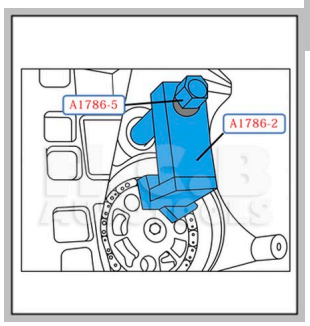
A1786-5
A1786-2