H.C.B-B1624 Mercedes-Benz (W204) DIFFERENTIAL BUSH REMOVAL/INSTALLATION KIT





* The differential bushes will be broken due to the rain and long-term wearing, and finally make car unstable when driving. So, this kit can help you change differential bushes. * This kit is designed to remove/install the differential bushes and

Rating: Not Rated Yet
Price:

Sales price:

Discount:

Ask a question about this product

Manufacturer: HCB Specialty Tools

Description

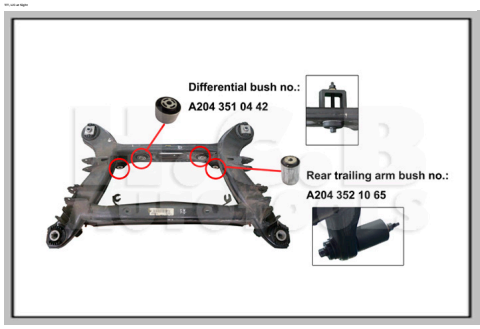
Differential bush no.:
A204 351 04 42
Rear trailing arm bush no.:
A204 352 10 65

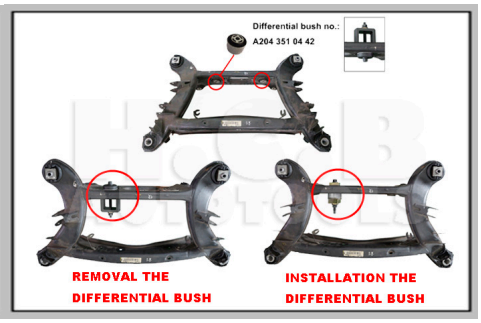
Differential bush no.:
A204 351 04 42
REMOVAL THE
DIFFERENTIAL BUSH
INSTALLATION THE
DIFFERENTIAL BUSH


Rear trailing arm bush no.:
A204 352 10 65
REMOVAL THE REAR
TRAILING ARM BUSH
INSTALLATION THE
REAR TRAILING ARM BUSH